MACHINING DEVIATIONS FOR LINEAR DIMENSIONS	RANGE	0 - 6	6 - 30	30 - 120	120 - 315	315 - 1000	1000-2000	2000-4000	ABOVE 4000	
	TOLERANCE	±0.1	±0.2	±0.3	±0.5	±0.8	±1.2	±2	±3	~

FOR DIMENSIONAL TOLERANCES OF SHEET METAL PARTS AND WELDED STRUCTURES REFER STD 93-227

UNSPECIFIED TOLERANCE FOR LINEAR AND ANGULAR DIMENSIONS REF IS 2102 (PT-1) (MEDIUM) — QUALITY OF WELD JOINTS REF IRO 230 MEDIUM

VALUES OF SURFACE TEXTURE SHALL BE AS PER COMPANY STD DS 012C

WELDING SHALL BE CARRIED OUT AS PER IS 9595-96

STATUS: PRODUCTION

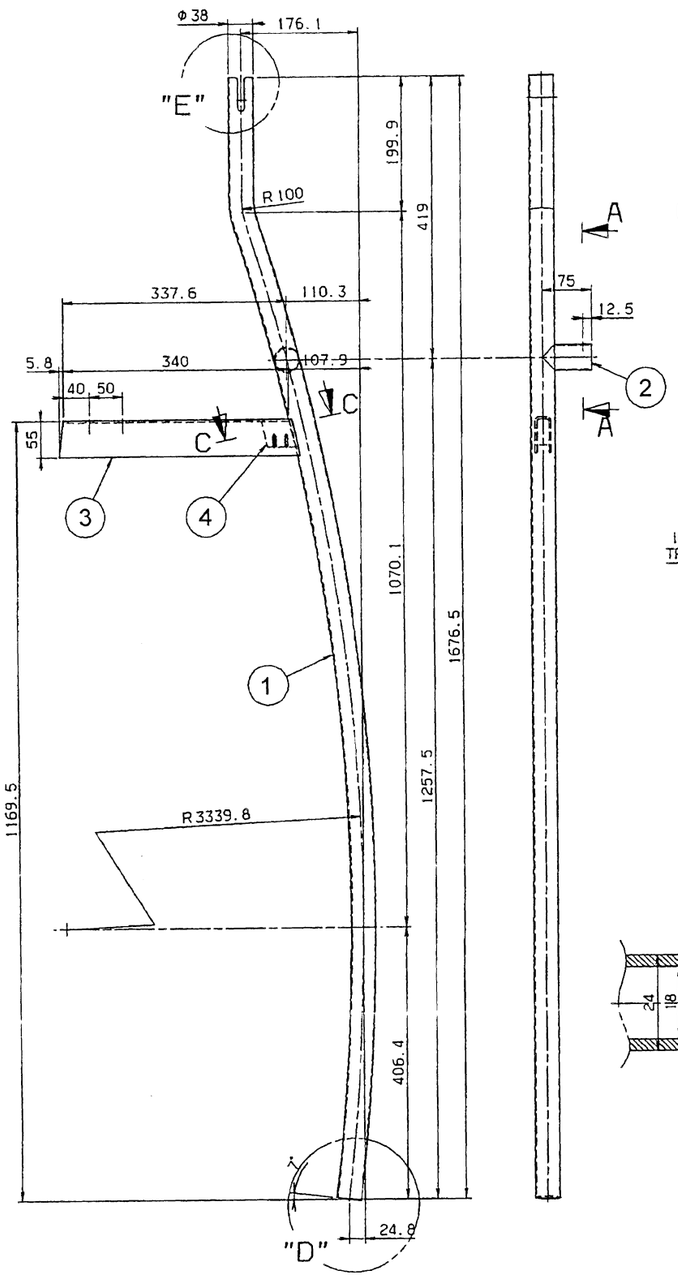

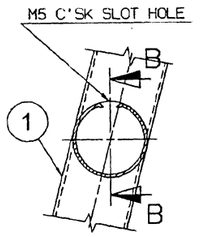

SECTION A-A

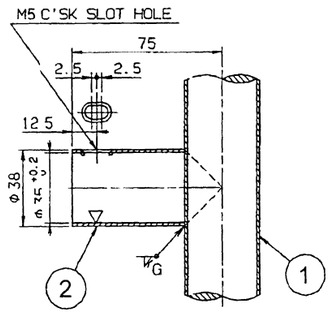

SECTION B-B

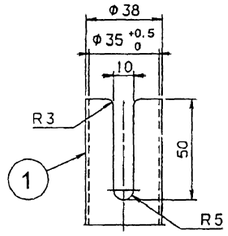

DETAIL "E"

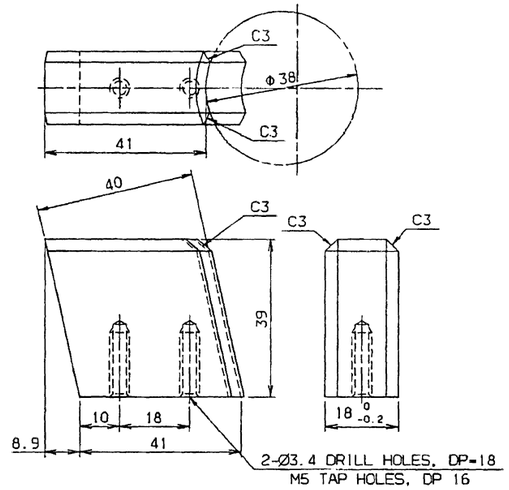

DETAIL "4"

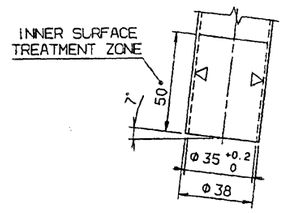

DETAIL "D"

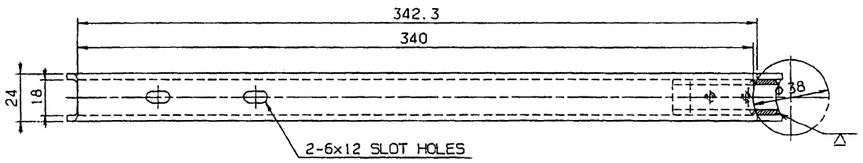

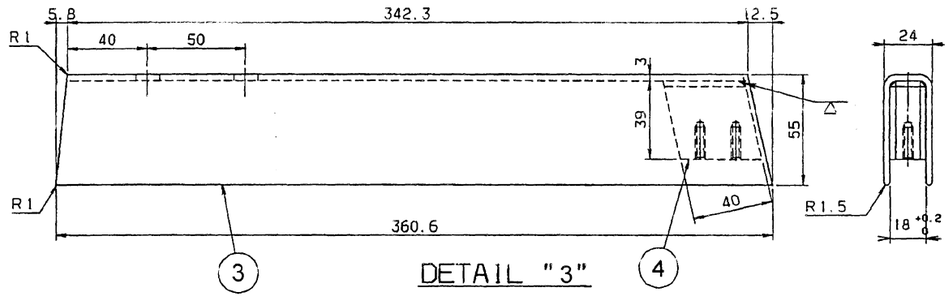

DETAIL "3"

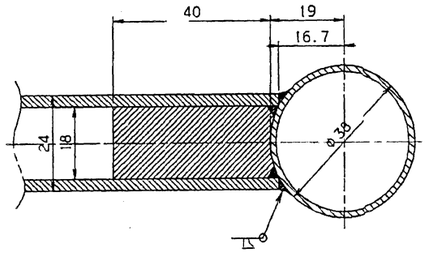

SECTION C-C

UNCONTROLLED

SL No	QTY	PART / STOCK No	DESCRIPTION	SIZE	COMPANY STD/IS MATERIAL	WT (Kg)
4	1	909-29016-04	SEAT	18THK	SUS 304	
3	1	909-29016-03	SUPPORT	3THK	SUS 304	
2	1	909-29016-02	CONNECTOR	Ø38x1.5THK	SUS 304	
1	1	909-29016-01	PIPE	Ø38x1.5THK	SUS 304	

ASSEMBLY No.	REMARKS
909-29016-300	AS DRAWN
909-29016-301	OPPOSITE DRAWN

NOTE

1. ASSEMBLY SHALL CONFORM TO PTS DOC No GR/TD/3015

PRODUCT	DMRC BG METRO CARS
REF DRG	
MATERIAL	-
HEAT TREAT	-
SURFACE TREAT	-
TITLE	GRAB POLE (C)
APPD	24/10/15
REVD	
CHKD	20.10.15
DRWN	PURUSHOTHAMAN 05/09/2015
SCALE	NTS
SHEET	1 OF 1
WT (Kg)	-
DRG No	909-29016
ALT	A1

BEML LIMITED

ALT NO | ECN NO/CHANGES | DATE | BY | CHKD | APPD

COPY RIGHT & CONFIDENTIAL THIS DOCUMENT IS THE EXCLUSIVE PROPERTY OF BEML & CONTAINS CONFIDENTIAL INFORMATION. IT MUST NOT BE DISCLOSED TO THIRD PARTIES OR REPRODUCED (IN WHOLE OR IN PART) WITHOUT PRIOR WRITTEN PERMISSION OF BEML. THIS DOCUMENT & ALL ITS COPIES SHALL BE RETURNED TO BEML ON DEMAND. DRAWING NOT ISSUED UNDER ANY CONTRACT SIGNATURE WITHOUT SEQUENCE

GRADE No | N12 | N11 | N10 | N9 | N8 | N7 | N6 | N5 | N4 | N3 | N2 | N1

VALUE | 50 | 25 | 12.5 | 6.3 | 3.2 | 1.6 | 0.8 | 0.4 | 0.2 | 0.1 | 0.05 | 0.025

SYMBOL

SURFACE ROUGHNESS